PROPRIETARY INFORMATION
COMPANY CONFIDENTIAL

REV.	ECN. NO.	DESCRIPTION	ENG	DATE
A		INITIAL	Lucky	2018.10.26
B		Modify the shrapnel structure	Lucky	2019.06.13

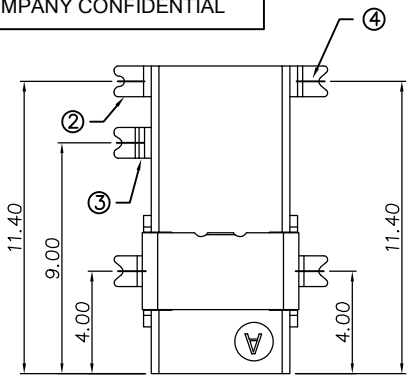

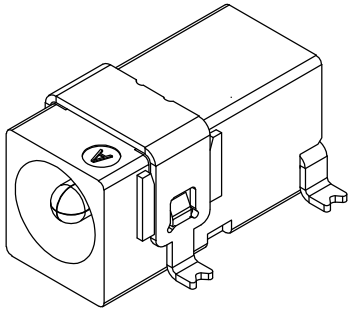

SPECIFICATIONS:

1. ELECTRICAL CHARACTERISTICS:
   1-1. RATING: 24V 1A
   1-2. CONTACT RESISTANCE:50mΩ MAX.(INITIAL)
   1-3. DIELECTRIC WITHSTANDING VOLTAGE: 500V AC FOR ONE MINUTE
   1-4. INSULATION RESISTANCE: 100M MIN. MEASURED BY 500V DC
2. MECHANICAL CHARACTERISTICS:
   2-1. INSERTION FORCE : 3N (0.30KGF)
   2-2. WITHDRAWAL FORCE : 30N (3.00) KGF
3. LIFE TEST: 5,000 CYCLES MIN.
4. FOR REFLOW SOLDERING LEAD-FREE PROCESS.

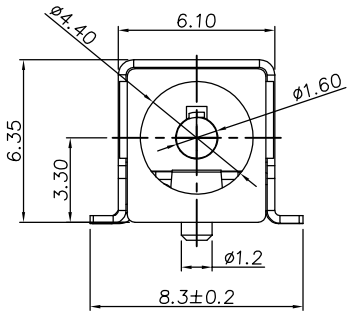

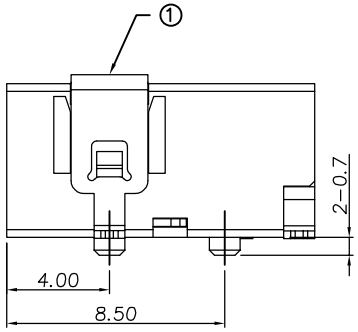

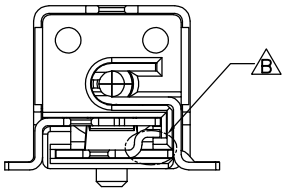

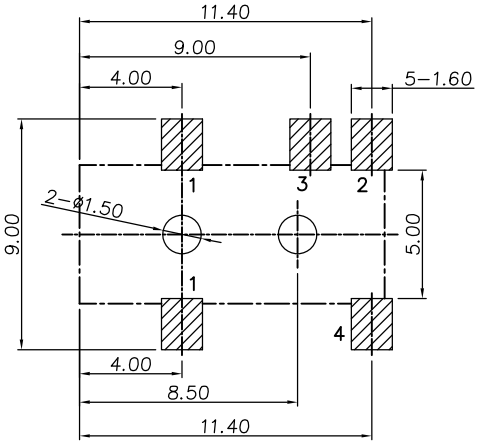

RECOMMENDED PCB LAYOUT
TOP VIEW (TOLERANCE:±0.05)

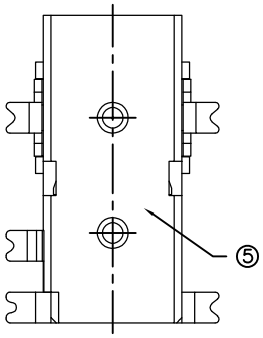

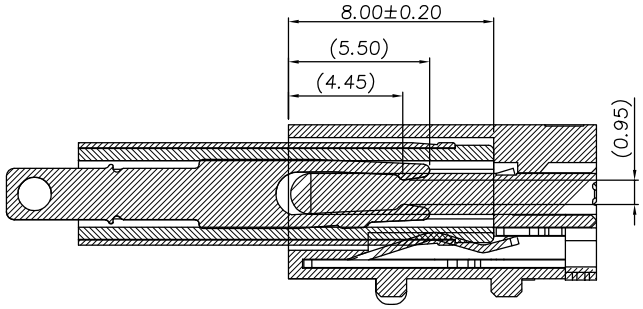

示意图

ELECTRICAL CIRCUIT

ITEM	NAME	Q'TY	DESCRIPTION	NOTE
5	HOUSING	1	HIGH TEMPERATURE;COLOR BLACK	
4	CONTACT PIN	1	BRASS; THE BOTTOM OF THE NICKEL; THE WHOLE MATTE TIN PLATING.	
3	TIP SPRING	1	PHORPHOS BRONZE; THE BOTTOM OF THE NICKEL;THE WHOLE MATTE TIN PLATING.	
2	CONCTOR PIN	1	BRASS; THE BOTTOM OF THE NICKEL; THE WHOLE SILVER PLATING.	
1	POSITIONING PIN	1	BRASS; THE BOTTOM OF THE NICKEL; THE WHOLE TIN PLATING.	

MEASURE POINT:
QUADRANT POINT (QP)
TANGERCY POINT (TP)
INTERSECTION POINT (IP)

UNLESS OTHERWISE SPECIFIED, TOLERANCE:

X.	±0.50
X.x	±0.30
X.xx	±0.20
X.xxx	±0.10
ANGULAR	±3'

东莞市文章济美电子有限公司

DESIGN:	DATE:	TITLE: DC POWER JACK CONNECTOR	
CHECKED:	DATE:		
APPROVED:	DATE:		
PART NO. DCJR0027-F04A5BR-A		REV.: B	SCALE: 1:1 / UNIT: mm
DRAWING NO.		SIZE: A4	SHEET: 1/1