RoHS Compliant

结构图面

REV	DESCRIPTION	APPR	CHECK	DRAW	DATE
0	新版发行		JACK	Yang	250908

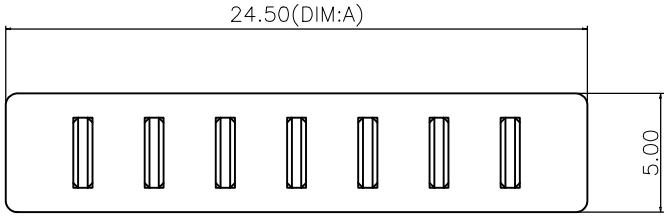

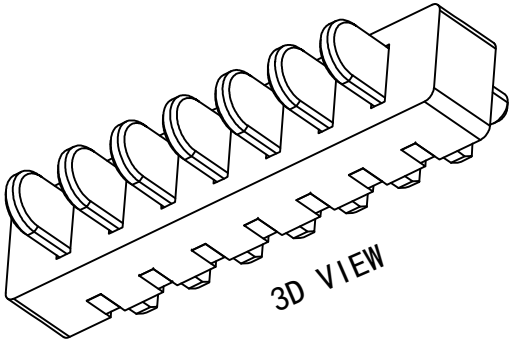

备注：
1. 额定电流：15A（单PIN）；
2. 额定电压：AC/DC 30V Max
3. 绝缘耐压：AC 1000V 1 MINUTE,无损伤
4. 绝缘电阻：DC 500V 1 MINUTE,1000MΩ Min
5. 操作温度：-40° to +85°
6. 塑胶材质：PA9T黑色/耐高温260° ±5°，
7. 五金材质：C2680(T=0.8mm)/镀金1u”

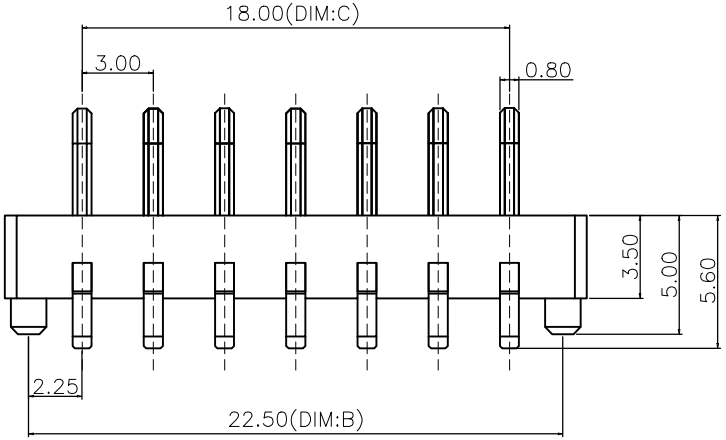

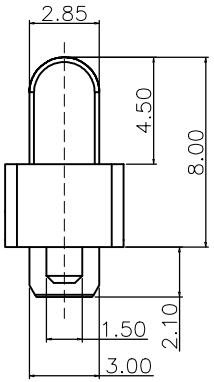

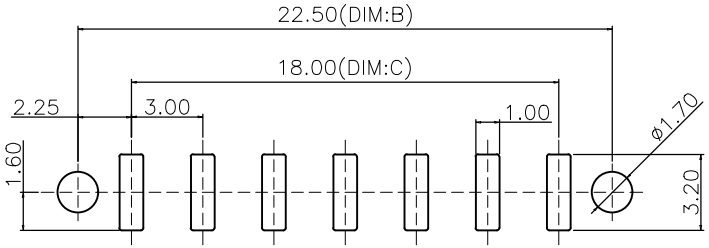

P.C.B LAYOUT
TOLERANCE: ±0.05

PART NUMBER	P/N	DIM:A	DIM:B	DIM:C
JMED02-30FD15A01	02PIN	9.50	7.50	3.00
JMED03-30FD15A02	03PIN	12.50	10.50	6.00
JMED04-30FD15A03	04PIN	15.50	13.50	9.00
JMED05-30FD15A04	05PIN	18.50	16.50	12.00
JMED06-30FD15A05	06PIN	21.50	19.50	15.00
JMED07-30FD15A06	07PIN	24.50	22.50	18.00
JMED08-30FD15A07	08PIN	27.50	25.50	21.00
JMED09-30FD15A08	09PIN	30.50	28.50	24.00
JMED10-30FD15A09	10PIN	33.50	31.50	27.00
JMED11-30FD15A10	11PIN	36.50	34.50	30.00
JMED12-30FD15A11	12PIN	39.50	37.50	33.00

QUALITY SYMBOLS

GENERAL TOLERANCES (UNLESS SPECIFIED)

	MM		INCH
.X	±0.25	.X	±----
.XX	±0.15	.XX	±----
.XXX	±0.05	.XXX	±----

ANGULAR ±1°

DRAFT WHERE APPLICABLE MUST REMAIN WITHIN DIMENSIONS

SCALE: 1:1 | NUMBER: | MATERAIL: | HRC: | DRAWN BY | DATE | CHECKED BY | DATE | APPROVED BY | DATE

深圳市文章济美科技有限公司

TITLE: 3.0PH 180度DIP 8.0H 公座/大电流

THIRD ANGLE PROJECTION | REVISE ON CAD ONLY

PART NO. | DWG NO. | SHEET NO. 1/1

A4